SUPERPLAN

- exclusive, elegant design
- made of KALDEWEI steel enamel
- flush-fitting recessed waste cover (only in combination with the KA 90 waste fittings)

Similar illustration

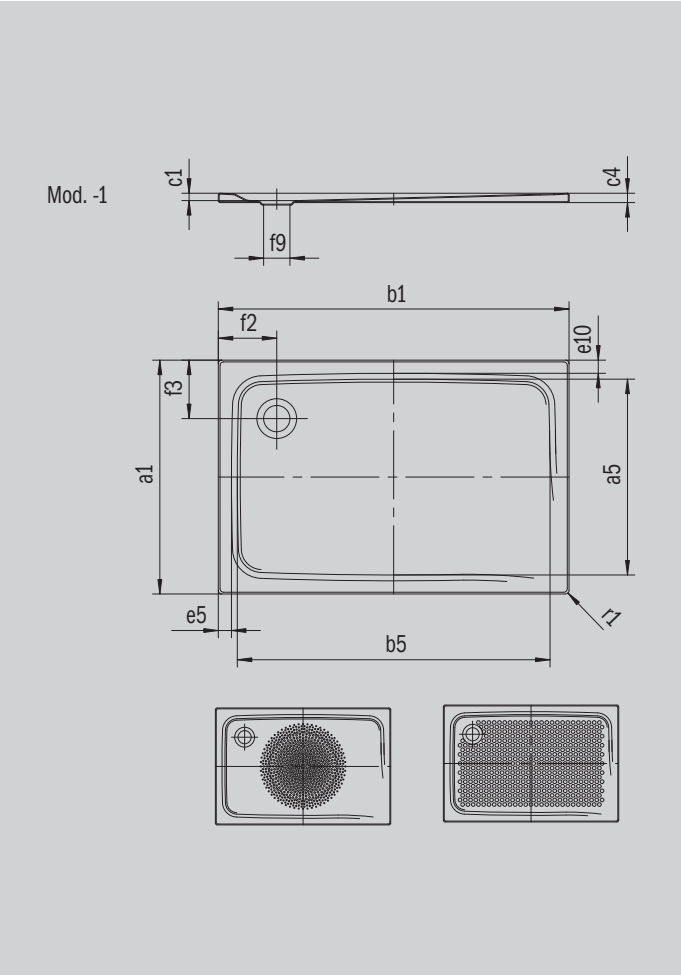

Model 386	KA 90 horizontal	KA 90 flat	KA 90 vertical
Total height	105	85	37
Fitting height	80	60	80

ANTISLIP SECURE+

Model		386
External length	a_1	800 mm
Internal length	a_5	690 mm
External width	b_1	800 mm
Internal width	b_5	690 mm
Depth inside	c_1	25 mm
Height of rim	c_4	32 mm
Height with low-profile support	c_{16}	37 mm
Width of rim	e_{10}; e_5	50; 50 mm
Diameter of waste hole	f_9	Ø 90 mm
Distance bath edge to centre of waste hole	f_2; f_3	200; 200 mm
External radius	r_1	12 mm
Net weight		18 kg
Diameter of anti-slip		Ø 435 mm
Full anti-slip		586 x 565 mm
ANTI-SLIP SECURE PLUS		full base

KALDEWEI