SUPERPLAN

- exclusive, elegant design
- made of KALDEWEI steel enamel
- flush-fitting recessed waste cover (only in combination with the KA 90 waste fittings)

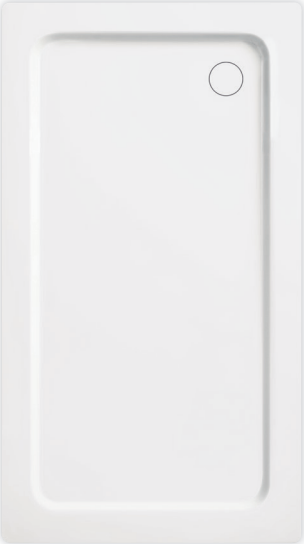

Similar illustration

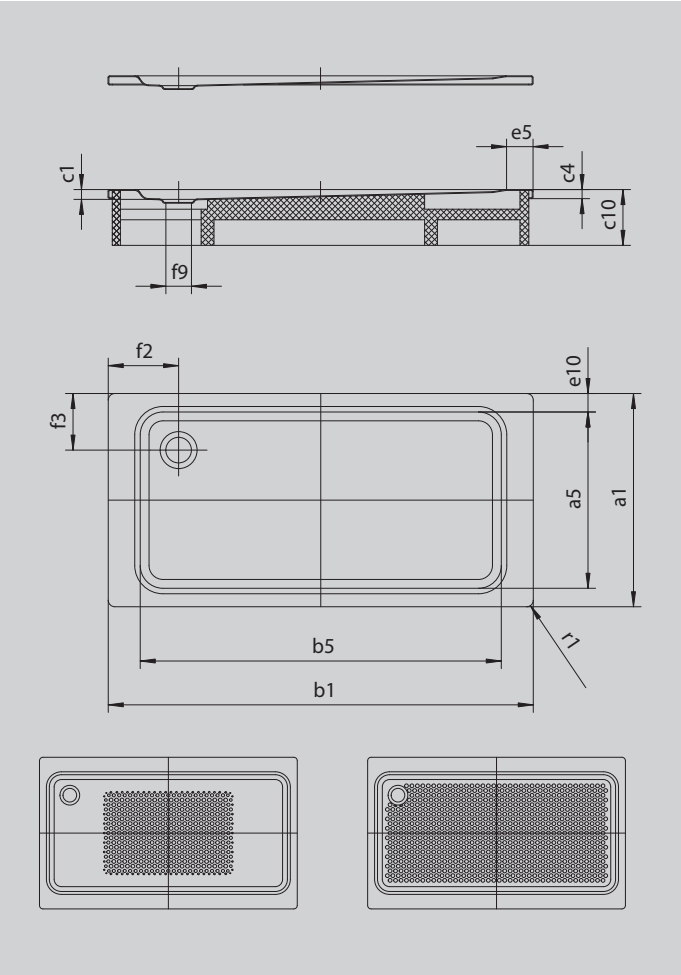

Model 441	KA 90 horizontal	KA 90 flat	KA 90 vertical
Total height	131	111	49
Fitting height	80	60	80

ANTISLIP SECURE+

Model		**441**
External length	a_1	900 mm
Internal length	a_5	790 mm
External width	b_1	1800 mm
Internal width	b_5	1580 mm
Depth inside	c_1	51 mm
Height of rim	c_4	32 mm
Width of rim	e_{10}; e_5	50; 100 mm
Diameter of waste hole	f_9	Ø 90 mm
Distance bath edge to centre of waste hole	f_2; f_3	250; 200 mm
External radius	r_1	12 mm
Net weight		41 kg
Anti-slip		549 x 856 mm
Full anti-slip		649 x 1465 mm
ANTI-SLIP SECURE PLUS		full base

KALDEWEI