CONOFLAT

- straightlined, purist design
- high level of comfort thanks to the flat enamelled waste cover that is flush with the shower area
- can be installed to be absolutely flush with the floor
- ideally complements the CONODUO bath
- designed by Sottsass Associati
- made of KALDEWEI steel enamel

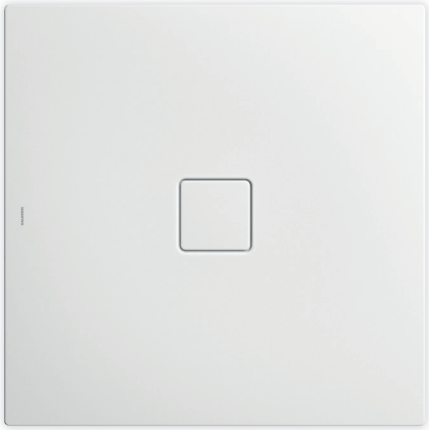

Similar illustration

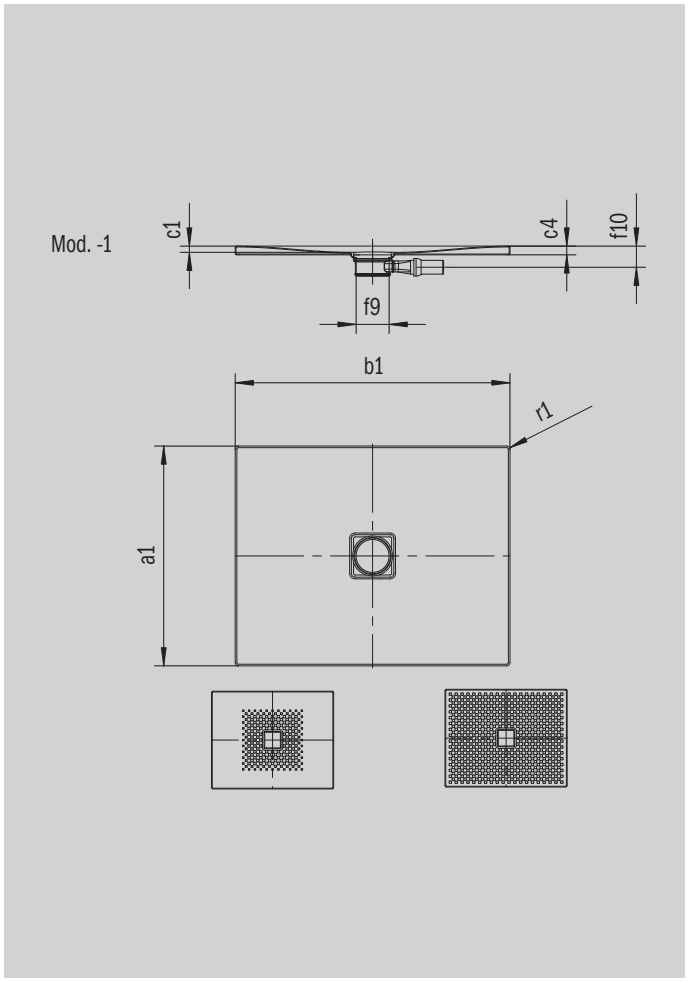

Model 783	KA 120 horizontal	KA 120 flat	KA 120 vertical
Total height	106	86	49
Fitting height	83	63	83

ANTISLIP SECURE+

Model		783
External length	a_1	900 mm
External width	b_1	900 mm
Depth inside	c_1	23 mm
Height of rim	c_4	32 mm
Height with support	c_{10}	110 mm
Diameter of waste hole	f_9	Ø 120 mm
Bottle trap connection height	f_{10}	76 mm
External radius	r_1	12 mm
Net weight		22 kg
Anti-slip		492 x 492 mm
Full anti-slip		836 x 836 mm
ANTI-SLIP SECURE PLUS		full base

KALDEWEI