CONO BUILT-IN WASHBASIN

- washbasin with premium character exudes elegance and harmony
- optimally integrated enamelled waste accentuates the underlying geometry of the washbasin
- perfectly complements the CONO range
- unusually generous rim provides space for fittings or individual accessories

Similar illustration

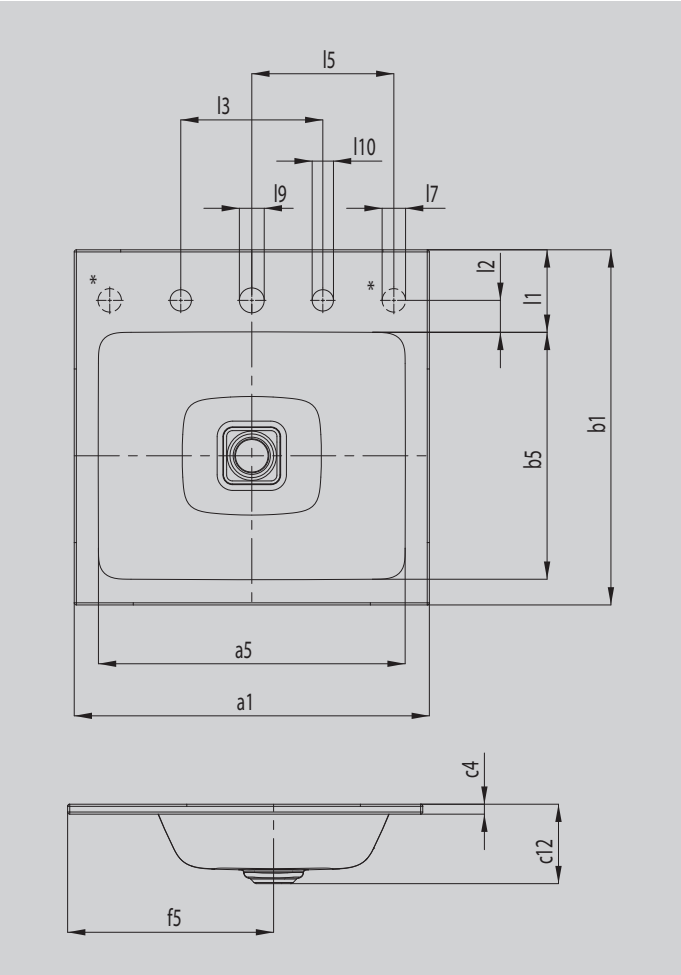

* Rotary knob hole for waste and overflow valve CLOU with cable pull and rotary knob optionally on the right or left

Model		**3075**
External length	a_1	500 mm
Internal length	a_5	432 mm
External width	b_1	500 mm
Internal width	b_5	348 mm
Height of rim	c_4	14 mm
Distance basin surface to bottom edge of waste hole	c_{12}	112 mm
Distance rear edge to centre of waste hole	f_5	290 mm
Depth of tap deck	l_1	116 mm
Distance tap holes to edge	l_2	45 mm
Distance external tap holes (for 3 tap holes)	l_3	200 mm
Distance tap hole to centre of control knob hole	l_5	200 mm
Diameter of control knob hole	l_7	Ø 33 mm
Diameter of centre tap hole	l_9	Ø 35 mm
Diameter of outside tap hole (for 3 tap holes only)	l_{10}	Ø 30 mm
Net weight		7 kg

KALDEWEI